Digital Logic Design

Final Project Assignment

Student Name	ID
Atekah Aljafar	222427138
Sarh Alsalem	222433784
Zainab Alhadhari	222405495

Problem# 1

In **digital** logic and computing, a multiplexer (or mux; spelled sometimes as multiplexor), also known as a data selector, is **a device that selects between several analog or digital input signals and forwards the selected input to a single output line**. The selection is directed by a separate set of digital inputs known as select lines.

In this project, students have to build a 8x1 Multiplexer using the required logic gates.

Deliverables:

1. List down all required equipment for the implementation of this projec
   LOGISIM.

2. Circuit diagram with properly labeled input and outputs, with detailed pin configuration.

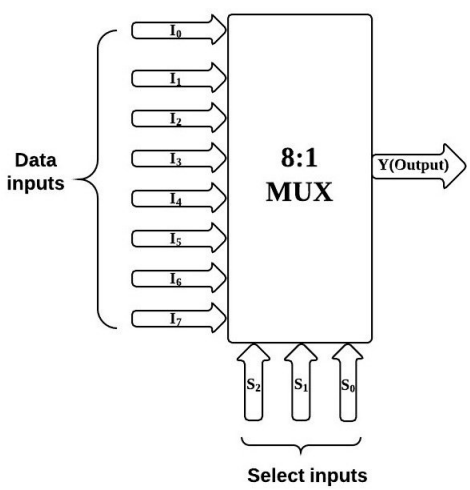

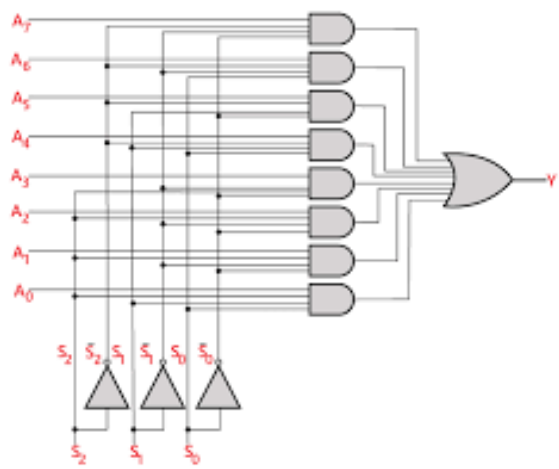

I0 to I7 are the eight input lines.
S0, S1, and S2 are the four select lines.
Output (Y) is the output line.

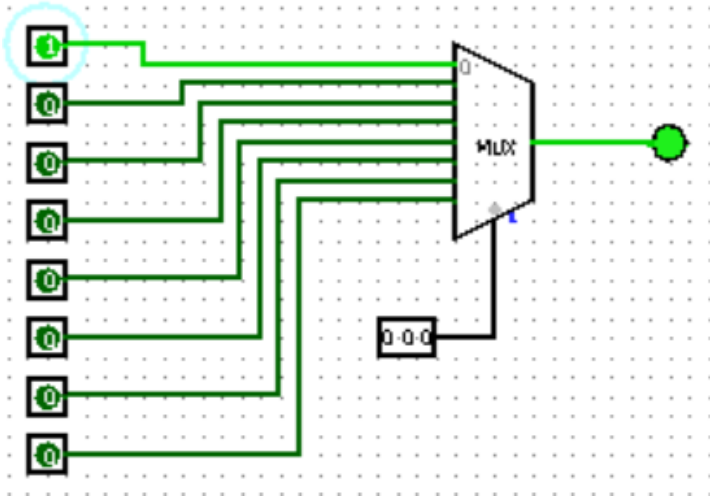
MUX
0 0 0

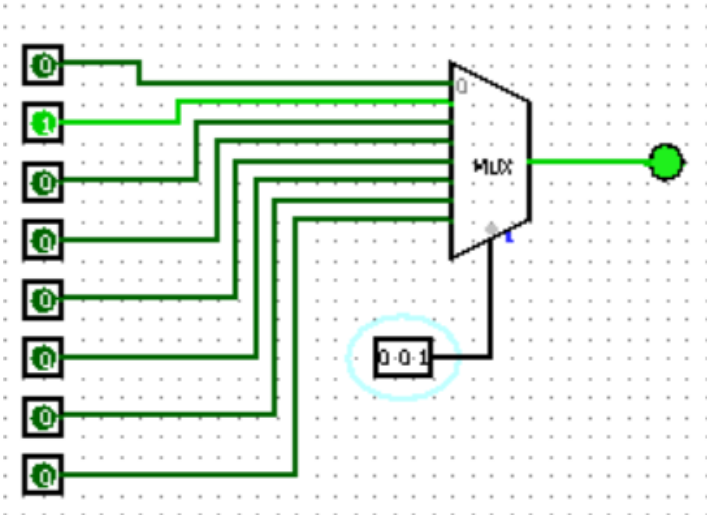
MUX
0 0 1

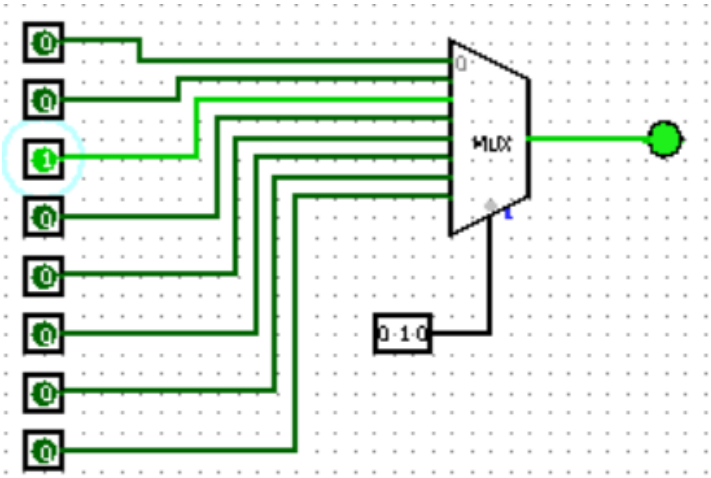
MUX
0 1 0

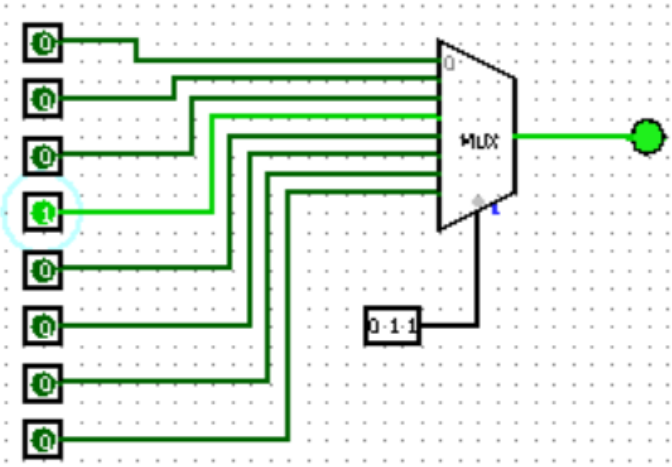
MUX
0 1 1

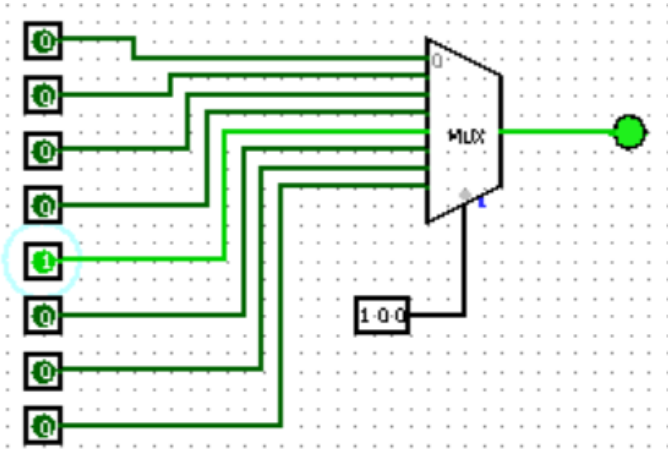
MUX
1 0 0

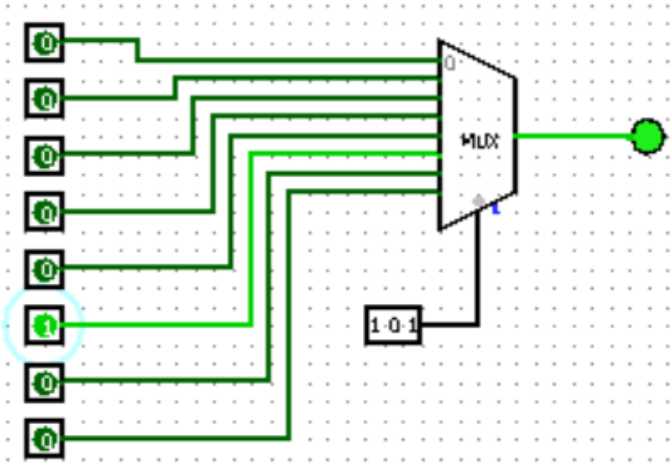
MUX
1 0 1

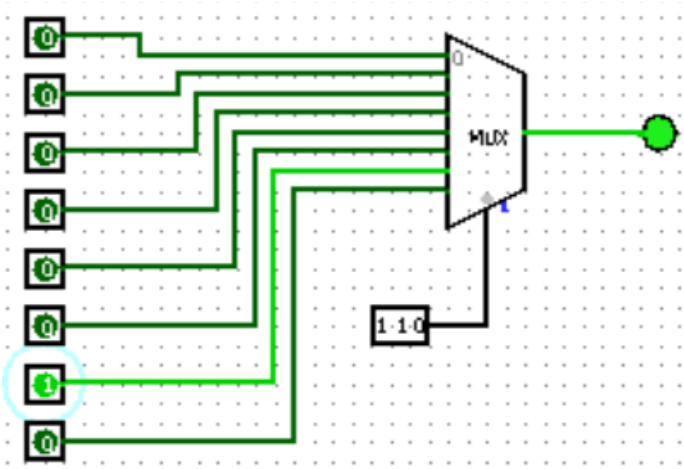
0
0
0
0
0
0
1
0
0
MUX
1
1·1·0

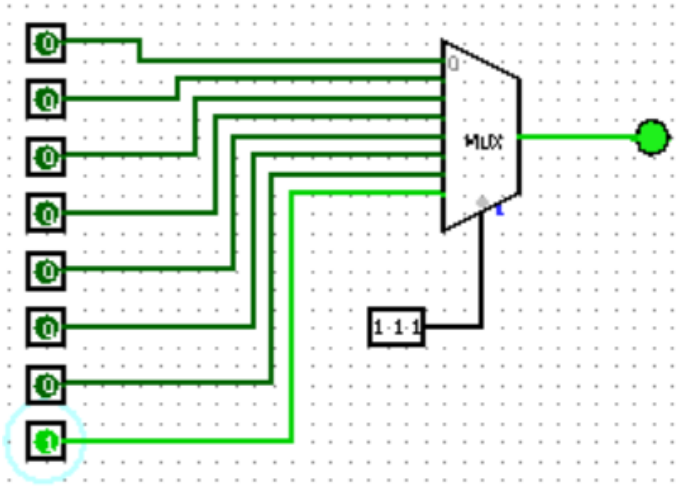
0
0
0
0
0
0
0
1
0
MUX
1
1·1·1

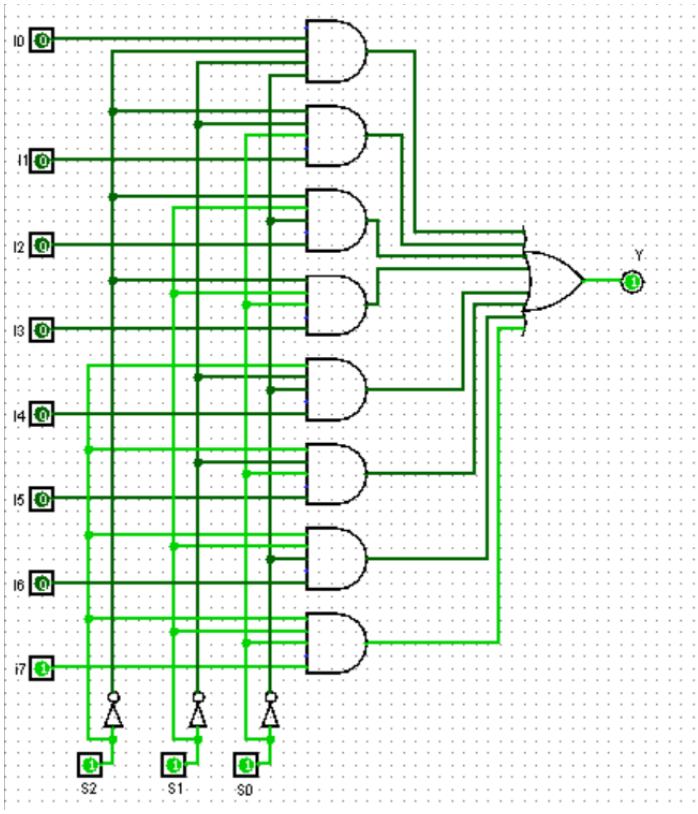

1.circ

2.circ

3. Equation and Truth table mentioning each output state relevant to different inputs.

Y = (S2' * S1' * S0' * I0) + (S2' * S1' * S0 * I1) + (S2' * S1 * S0' * I2) + (S2' * S1 * S0 * I3) + (S2 * S1' * S0' * I4) + (S2 * S1' * S0 * I5) + (S2 * S1 * S0' * I6) + (S2 * S1 * S0 * I7)

Select Input			**Data Output**
S_2	**S_1**	**S_0**	**Y**
0	**0**	**0**	**I_0**
0	**0**	**1**	**I_1**
0	**1**	**0**	**I_2**
0	**1**	**1**	**I_3**
1	**0**	**0**	**I_4**
1	**0**	**1**	**I_5**
1	**1**	**0**	**I_6**
1	**1**	**1**	**I_7**

4. List down ***three*** applications of Multiplexers (for Problem 1)

Applications of Multiplexers:

1. Communication Systems: Multiplexers combine multiple signals into a single channel for efficient transmission in telecommunications and digital data transmission.
2. Digital Displays: Multiplexers are used to drive digital displays like seven-segment displays in devices such as clocks and calculators, allowing multiple digits to be shown using fewer input lines.
3. Computer Memory Addressing: Multiplexers help select specific memory locations in computer systems, reducing the number of control lines required for memory selection and improving memory addressing efficiency.